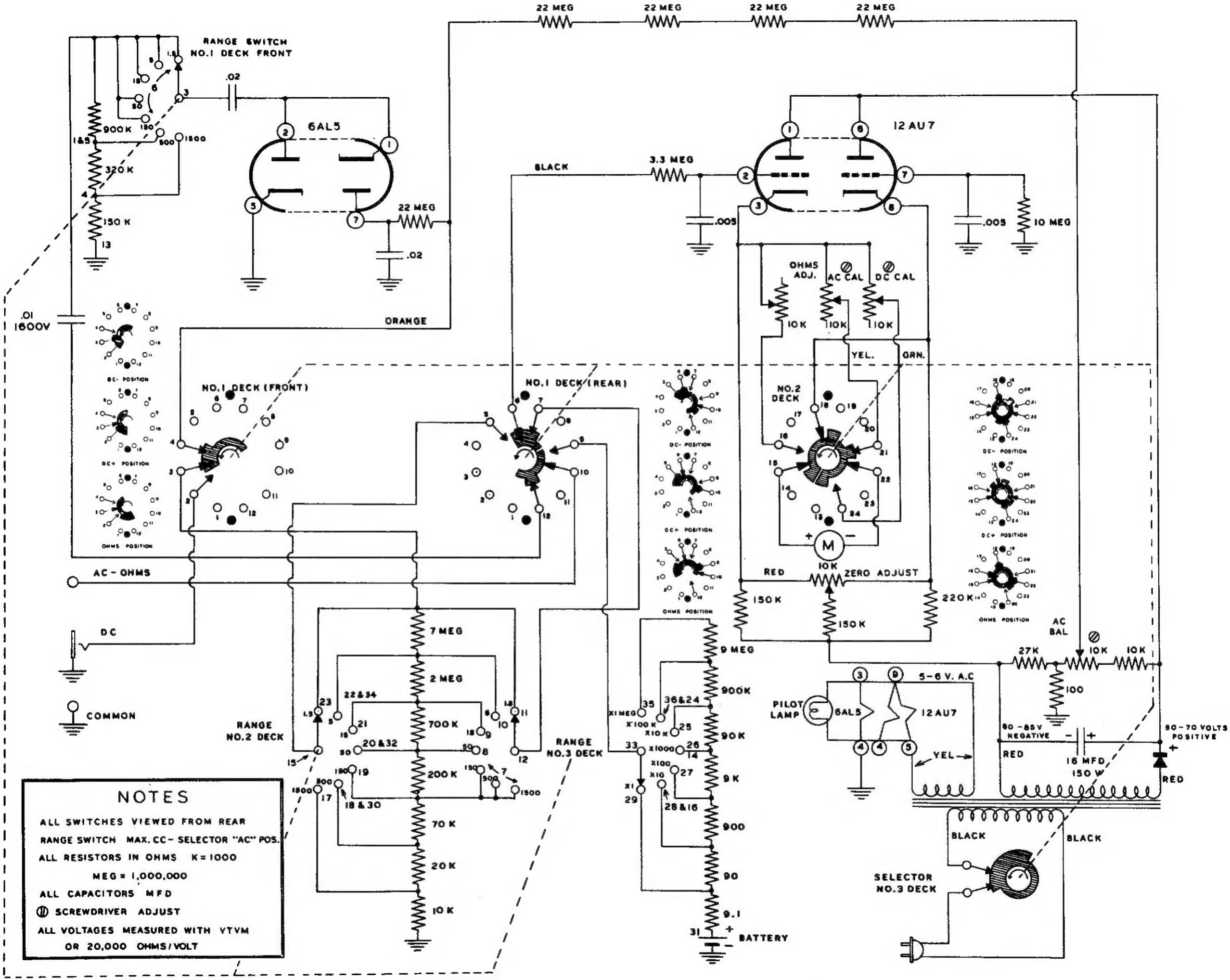

NOTES

ALL SWITCHES VIEWED FROM REAR

RANGE SWITCH MAX. CC- SELECTOR "AC" POS.

ALL RESISTORS IN OHMS K=1000

MEG = 1,000,000

ALL CAPACITORS MFD

SCREWDRIVER ADJUST

ALL VOLTAGES MEASURED WITH VTVM OR 20,000 OHMS/VOLT

HEATHKIT PEAK-TO-PEAK VTVM
MODEL V-7A